Current Loop Dead-beat Control with the Digital PI-controller

Alecksey Anuchin, Vladimir Kozachenko
NATIONAL RESEARCH UNIVERSITY "MOSCOW POWER ENGINEERING INSTITUTE"
Krasnokazarmennaya 14
Moscow, Russia
Tel.: +7 / (495) – 362.70.21.
Fax: +7 / (495) – 362.89.38.
E-Mail: anuchinas@mpei.ru
URL: http://www.mpei.ru

Keywords

«Autotuning», «Digital control», «Highly dynamic drive», «Optimal control», «Microcontrollers».

Abstract

This paper shows the possibility of dead-beat control for a current loop with a traditional PI-controller. Two different ways of PI-controller parameter calculations are presented. The modeling shows that dead-beat behavior of the current controller is possible if the predictive feedback is used and its calculation algorithm is presented. Algorithm includes winding circuit inductance estimation, correction of ADC feedback measurement to take into account preamplifier's filter impact and ADC noise. All tests were performed on a DC-motor model but the results can be used for alternating current motors.

Introduction

PI (or sometimes PID) is the most widespread type of controller for close-loop control systems. It is still popular due to simple methods of tuning though today other powerful control strategies such as fuzzy-logic or neural networks are widely used. Algorithms for PI-controller parameters calculation for analog PI-controllers have been established but there is not enough information on digital PI-controller implementations and the capabilities of digital control systems with a PI-controller.

This paper presents different methods for digital PI-controller parameter calculation to achieve a single PWM period response time and gives recommendations for feedback calculation. The DC-motor was taken for model testing due to its simplicity. It is fed from a half-bridge PWM converter and the aim is to build a current loop with dead-beat control. The results can be expanded on AC drives.

The presented method is very similar to the one given in [1] but it pays more attention to motor parameter estimation. All motor and power-converter parameters in [1] are determined by list square estimator and this paper deals with estimation based on physical equations of the controlled system. The described method has good performance with small variations of reference signal compatible with hysteresis controller.

PI-controller Parameter Calculation Using Z-Transform Method

The testing motor has the following parameters and states: armature resistance $R = 1\Omega$, armature inductance $L = 0.01\text{H}$, $emf = 60\text{V}$ and inverter supply voltage $V_{DC} = 110\text{V}$. PWM frequency is 1000 Hz. The power circuit is shown in Figure 1. Let's assume that a power converter can be replaced by zero order hold and gain, there is no dead-time and no voltage drop on transistors and diodes. Also,

we assume that we know the exact value of inductance of DC-motor winding and can obtain the exact value of the current at any time.

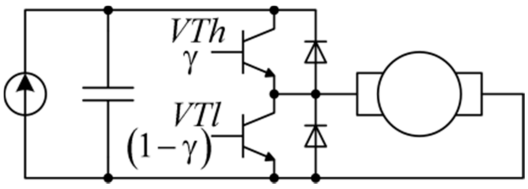

Fig. 1. Power converter and DC-motor

To obtain controller transfer function for a current loop let's use the desired close-loop discrete transfer function

$$W_{DCL}(\mathrm{z}) = \mathrm{z}^{-1}. \tag{1}$$

Hence the desired open-loop discrete transfer function is:

$$W_{DOL}(\mathrm{z}) = \frac{1}{\mathrm{z}-1}. \tag{2}$$

The plant transfer function is:

$$W_P(\mathrm{z}) = \frac{V_{DC}}{R}\frac{\left(1-\mathrm{e}^{-RT/L}\right)}{\left(\mathrm{z}-\mathrm{e}^{-RT/L}\right)}. \tag{3}$$

And now we can calculate the transfer function for the current controller:

$$W_{CC}(\mathrm{z}) = \frac{W_{DOL}(\mathrm{z})}{W_P(\mathrm{z})} = \frac{1}{\mathrm{z}-1}\cdot\frac{R}{V_{DC}}\cdot\frac{\left(\mathrm{z}-\mathrm{e}^{-RT/L}\right)}{\left(1-\mathrm{e}^{-RT/L}\right)} = \frac{\mathrm{z}\frac{R}{V_{DC}}\frac{1}{\left(1-\mathrm{e}^{-RT/L}\right)} - \frac{R}{V_{DC}}\frac{\mathrm{e}^{-RT/L}}{\left(1-\mathrm{e}^{-RT/L}\right)}}{\mathrm{z}-1}. \tag{4}$$

This is a PI current controller with the proportional gain $k_P = \frac{R}{V_{DC}}\frac{\mathrm{e}^{-RT/L}}{\left(1-\mathrm{e}^{-RT/L}\right)}$ and the integral gain $k_I T = \frac{R}{V_{DC}}$. For the control structure from Fig. 2 the plot for step response is shown in Fig. 3.

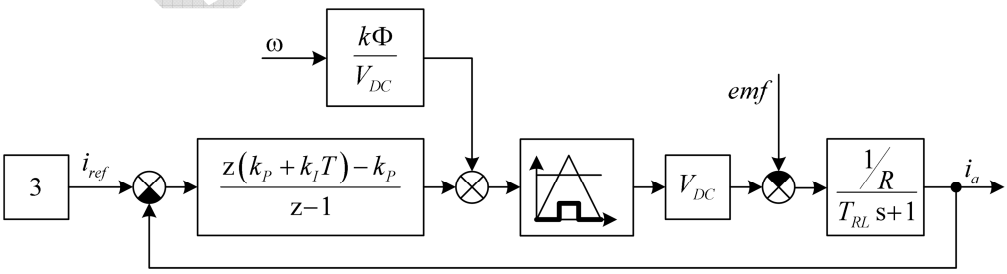

Fig. 2. Digital dead-beat current control loop with PI-controller

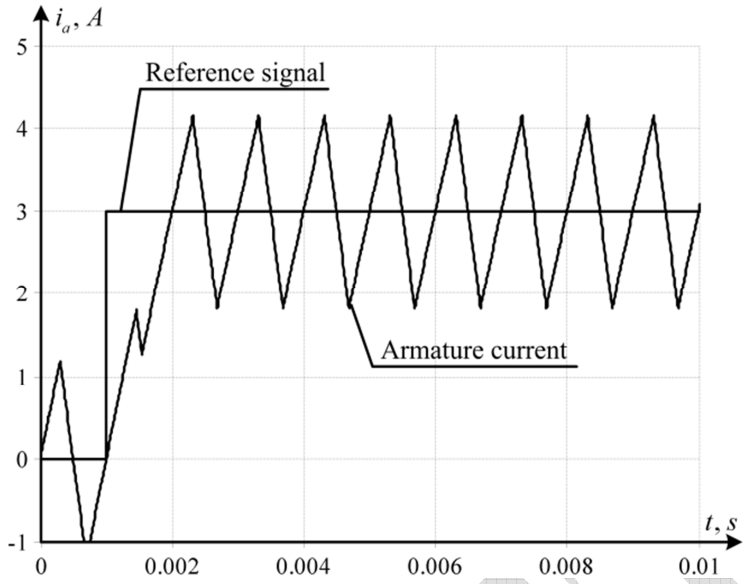

Fig. 3. Step response for dead-beat current PI-controller

PI-controller Parameter Calculation Using Voltage Balance Equation

We can try to obtain PI-controller parameters in a different way using voltage balance equations. There are two possible states for a circuit from Fig. 1 — when VTh is on (VTl is off) and when VTl is on (VTh is off):

$$L\frac{\mathrm{d}i_a}{\mathrm{d}t}=\begin{cases}V_{DC}-emf-i_aR, & VTh=on;\\ -emf-i_aR, & VTl=on.\end{cases} \tag{5}$$

Then we can replace d with Δ and temporally remove iR to simplify the equation:

$$\left.\begin{aligned}\Delta i_{a\uparrow}&=\frac{V_{DC}-emf}{L}\gamma T;\\ \Delta i_{a\downarrow}&=-\frac{emf}{L}(1-\gamma)T,\end{aligned}\right\} \tag{6}$$

where γ is the duty cycle for VTh. To calculate the change of the current during the PWM period we should add $\Delta i_{a\uparrow}$ to $\Delta i_{a\downarrow}$:

$$\Delta i_a=\frac{V_{DC}}{L}T\gamma-\frac{emf}{L}T. \tag{7}$$

If we know actual and reference currents, we can calculate the exact value of the duty cycle to reach the reference at the end of the next PWM period. Also, it should be mentioned that it can be possible only if there is enough voltage to do it in a single PWM period. Let's express the duty cycle from (7) and replace Δi_a with an error in the current:

$$\gamma[k]=\frac{k\Phi\omega}{V_{DC}}+\frac{L}{V_{DC}T}\left(i_{ref}[k]-i_a[k-1]\right). \tag{8}$$

The value of the proportional gain $k_P = \frac{L}{V_{DC}T}$ is very close to the same parameter in (4). The $\frac{k\Phi\omega}{V_{DC}}$ is the emf compensation.

There is an armature resistance in the real system and this should be taken into account. To compensate its impact we should add

$$\gamma_{iR}[k] = \frac{i_{ref}[k]R}{V_{DC}} \tag{9}$$

to (8). The reference current is used in (9) as it will be reached at the end of next PWM period. If the previous reference is achieved by the armature current then (9) can be expressed:

$$\gamma_{iR}[k] = \frac{R}{V_{DC}}\left(i_{ref}[k] - i_a[k-1] + i_{ref}[k-1]\right) = \gamma_{iR}[k-1] + \frac{R}{V_{DC}}\left(i_{ref}[k] - i_a[k-1]\right). \tag{10}$$

Equation (10) is an integrator and its result should be added to (8). The integral gain $k_I = \frac{R}{V_{DC}}$ is similar to the same parameter in (4).

Feedback Prediction for PI-controller in Digital Control System

Today most motor and power converter control systems are implemented on microcontrollers. Microcontroller has a finite performance of the software and ADC. This should be taken into account if we want to achieve the quality of response shown in Fig. 3.

Usually we need to obtain data from ADC at least two times during the PWM period. It is better to do it at the beginning of the PWM period and in the middle. The performance of TMS320F28xx devices is enough to obtain ADC data 8 times every PWM period. At the end of the 8th conversion software calculates arithmetic mean value and it can be used for feedback of the PI current controller [2]. This value is not exactly what is needed for the dead-beat PI-controller because it operates with the current right at the end of one PWM period to calculate duty cycle for the next one. That's why we need to predict the value of the feedback signal at the end of PWM period and the prediction has to be made not to close to the end of period because we should have a time to run PI-controller routine and to update the compare units of microcontroller before the next period starts.

In [3] it is suggested to use the FIR-function

$$x_{fbk}[k] = 1{,}5x[k] - 0{,}5x[k-1] \tag{11}$$

to predict the value of the changing signal for feedback but we still have a big overshoot and ringing. To achieve good result we should predict feedback value and make it very closed to the real current at the end of PWM period. It can be done using equations of the voltage balance for 8 points of ADC conversions on a single PWM period:

$$
\left.
\begin{aligned}
\hat{i}_a\left[k-\frac{7}{8}\right] &= \begin{cases} \hat{i}_a[k-1]+\left(V_{DC}-emf-\hat{i}_a[k-1]R\right)\dfrac{T}{8L}, & \gamma>0.25; \\ \hat{i}_a[k-1]+\left(4V_{DC}\gamma-emf-\hat{i}_a[k-1]R\right)\dfrac{T}{8L}, & \gamma\le 0.25. \end{cases} \\
\hat{i}_a\left[k-\frac{6}{8}\right] &= \begin{cases} \hat{i}_a\left[k-\frac{7}{8}\right]+\left(-emf-\hat{i}_a\left[k-\frac{7}{8}\right]R\right)\dfrac{T}{8L}, & \gamma<0.25; \\ \hat{i}_a\left[k-\frac{7}{8}\right]+\left(4V_{DC}(\gamma-0.25)-emf-\hat{i}_a\left[k-\frac{7}{8}\right]R\right)\dfrac{T}{8L}, & 0.25\le\gamma\le 0.5; \\ \hat{i}_a\left[k-\frac{7}{8}\right]+\left(V_{DC}-emf-\hat{i}_a\left[k-\frac{7}{8}\right]R\right)\dfrac{T}{8L}, & \gamma>0.5. \end{cases} \\
&\ldots \\
&\ldots \\
\hat{i}_a[k] &= \begin{cases} \hat{i}_a\left[k-\frac{1}{8}\right]+\left(V_{DC}-emf-\hat{i}_a\left[k-\frac{1}{8}\right]R\right)\dfrac{T}{8L}, & \gamma>0.25; \\ \hat{i}_a\left[k-\frac{1}{8}\right]+\left(4V_{DC}\gamma-emf-\hat{i}_a\left[k-\frac{1}{8}\right]R\right)\dfrac{T}{8L}, & \gamma\le 0.25. \end{cases}
\end{aligned}
\right\} \tag{12}
$$

The prediction of the armature current behavior $\hat{i}_a[k]$ can't be used directly for feedback because it was gained from open-loop equations. The difference between the estimated and actual value may be caused by errors in V_{DC} and emf measurement, errors in R and L values and calculation errors. The principles of tracking and compensation of DC-link voltage and emf measurement errors was described in [4]. The impact of error in resistance value is less than 5%. So we should pay more attention to the error in the inductance value.

The correction of the errors can be made using the relation between the mean value of the actual current obtained from ADC and the mean value of the estimated current:

$$
\hat{i}_{a\ fbk}[k]=\hat{i}_a[k]\frac{\sum_{j=1}^{8} i_a\left[k-\frac{j}{8}\right]}{\sum_{l=1}^{8}\hat{i}_a\left[k-\frac{l}{8}\right]}. \tag{13}
$$

Inductance Estimation

Let's assume that known inductance value is twice smaller than the real one. So there will also be an error in the proportional gain and response time will be greater than one PWM period. Due to the smaller model inductance the magnitude of the first harmonic of the predicted current will be twice as bigger as the real one. DFT can be used to obtain the sinusoidal component of the first harmonic for both currents — measured and estimated:

$$\left.\begin{aligned} I_{sin}[k] &= \sum_{j=0}^{7} i_a\left[k-\frac{8-j}{8}\right]\sin\left(\frac{2\pi}{8}j\right) = \\ &= \sin\left(\frac{2\pi}{8}\right)i_a\left[k-\frac{7}{8}\right]+\sin\left(2\frac{2\pi}{8}\right)i_a\left[k-\frac{6}{8}\right]+\ldots+\sin\left(7\frac{2\pi}{8}\right)i_a\left[k-\frac{1}{8}\right]; \\ \hat{I}_{sin}[k] &= \sin\left(\frac{2\pi}{8}\right)\hat{i}_a\left[k-\frac{7}{8}\right]+\sin\left(2\frac{2\pi}{8}\right)i_a\left[k-\frac{6}{8}\right]+\ldots+\sin\left(7\frac{2\pi}{8}\right)\hat{i}_a\left[k-\frac{1}{8}\right]. \end{aligned}\right\} \tag{14}$$

The new value of the inductance may be obtained with the following formula:

$$\hat{L}[k] = \hat{L}[k-1]\cdot\frac{\hat{I}_{sin}[k]}{I_{sin}[k]}. \tag{15}$$

For noise immunity it is better to use an iterative approach formula like:

$$\hat{L}[k] = \hat{L}[k-1]\cdot\left(1+\frac{\hat{I}_{sin}[k]-I_{sin}[k]}{\hat{I}_{sin}[k]+I_{sin}[k]}\right). \tag{16}$$

The response of the current loop with the inductance estimator is shown in Fig. 4. The solid line shows the behavior of the real current. The white round markers show model predicted current estimations, black square markers stand for arithmetic mean value of the measured current and the white square marker is the prediction of the current for feedback which was corrected with (13).

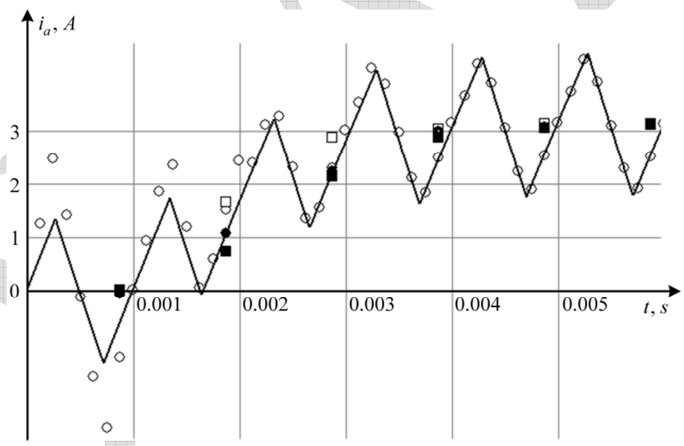

Fig. 4. Step response with inductance estimator

Effect of Analog Signal Filtering

The previous model experiment ignores the fact that all analog signals pass through prescaling and offset circuit with analog filtering. An example of such a circuit is shown in Fig. 5. There are two RC-filters in the circuit. One filter with R_m and C_{in} at the input and another with R_f and C_f at the ADC input. The major time constant in this particular case is

$$T_f = R_f C_f = 510\cdot 0.1\cdot 10^{-6} = 51\,\mu\text{s}. \tag{17}$$

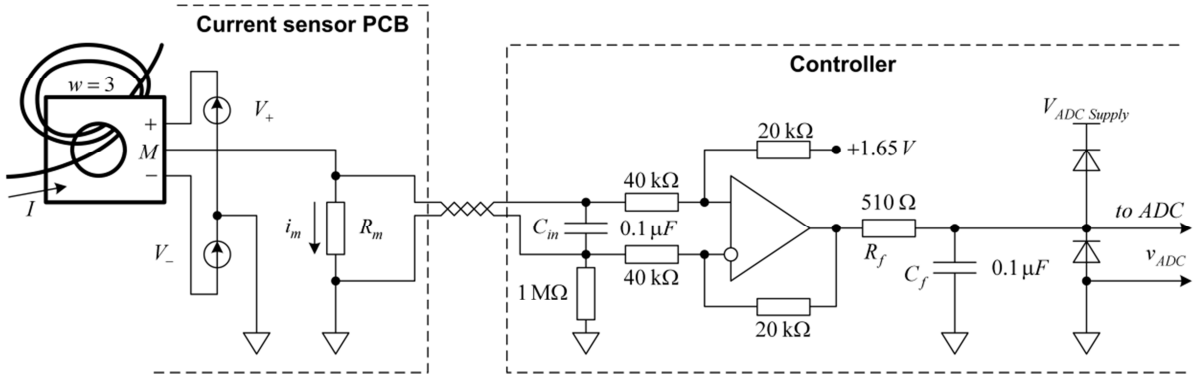

Fig. 5. Current sensor circuit

This filter affects the measured current signal and the magnitude of the sinusoidal component of the first harmonic. Its reduction can be calculated using the following equation:

$$A_{sin} = A\cos\varphi = \frac{1}{\sqrt{1+\Omega^2 T_f^2}}\cos\left(-\mathrm{arctg}\left(\Omega T_f\right)\right) = 0.952\cdot\cos\left(17.8^\circ\right) = 0.91. \tag{18}$$

So (16) had to be rewritten including the result of (18) to take into account the filtering process in the ADC circuit:

$$\hat{L}[k] = \hat{L}[k-1]\cdot\left(1+\frac{\hat{I}_{sin}[k]-\dfrac{I_{sin}[k]}{A_{sin}}}{\hat{I}_{sin}[k]+I_{sin}[k]}\right). \tag{19}$$

Effect of ADC Quantization Error and Noise

The effect of the ADC quantization must be taken into account when the input data variation used in control algorithm (for example in inductance estimation) is comparable to the ADC resolution and noise. Let's take TMS320F28xx 12-bit ADC with white noise (±2). The current sensor and analog input circuit is designed for the range from –500 to +500 A. The initial model inductance is twice as higher as the real one. The model experiment results are shown in Fig. 6. The thin solid line is the filtered current signal and the vertical bars are the data obtained from the ADC with the quantization error and noise.

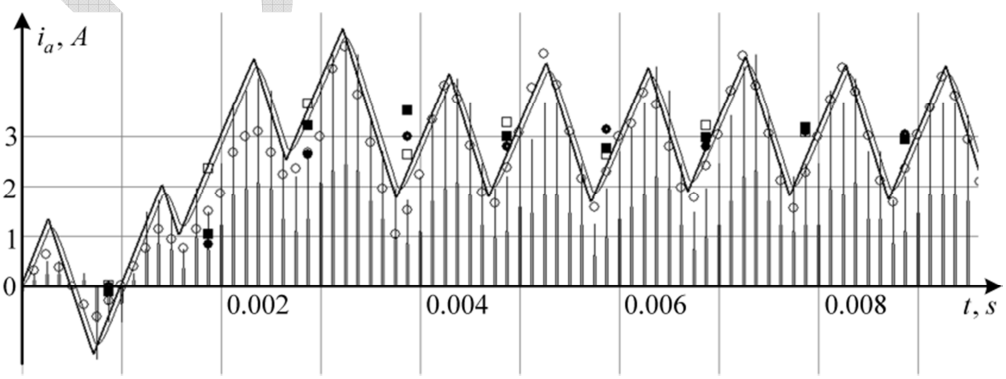

Fig. 6. Dead-beat current loop with ADC quantization effect

Microcontroller Implementation

The described algorithm will be useful only if it can be implemented in modern microcontrollers. All control algorithms use float(32) variable format which is now supported by Delfino and Concerto MCUs from Texas Instruments [5,6]. If necessary, the algorithm can be implemented in the IQ-mathematics [7] on the integer 32-bit microcontrollers. The control software can be divided into several functions:

- the calculation of the armature model, obtaining ADC data and calculation of intermediate results of DFT (8 times a PWM period): 2 comparisons, 2 branches, 7 additions or subtractions, 5 multiplications and 1 division;
- the prediction correction and the feedback calculation (1 time at the end of PWM period): 1 multiplication and 1 division;
- the inductance estimation and the controller proportional gain recalculation (1 time at the end of PWM period): 3 additions or subtractions, 3 multiplications, 2 divisions;
- the current controller and compare unit references update (1 time at the end of PWM period): 2 additions, 4 multiplications, 2 comparisons and 2 branches depends on selected PI-controller structure.

Total execution time is about 850 CPU cycles on TMS320F28335. The division operation will take most of the time. One division takes about 190 cycles as their routines are written for signed data and they perform some tests like division by zero test. It is possible to reduce division execution time to 30 CPU cycles or less replacing standard routines with fast version without any tests of input data. For 150 MHz microcontroller 1/8 of PWM period lasts for 1875 cycles so it is enough time for this algorithm implementation even if we consider the AC drive with d and q current controllers.

Conclusions

This paper shows that it is possible to obtain the dead-beat control in a current loop using a traditional PI-controller. The methods of its parameter calculation are simple but the PI-controller needs a predicted feedback signal. The implementation of the feedback predictor requires sufficient computing capacity but it is possible with modern MCUs not only for DC but also for AC-motor drives.

References

[1] Becker, F.; Ennadifi, H.; Braun, M.: Straightforward Current Control - One Step Controller based on Current Slope Detection EPE Journal Volume 22-2, 2012

[2] Grewal H., Oversampling the ADC12 for Higher Resolution, Application Report, Texas Instruments, P.8, SLAA323, July 2006

[3] Quang N.P., Dittrich J-A., Vector Control of Three-Phase AC Machines: System Development in the Practice (Power Systems), Springer, 2008, P.340

[4] Anuchin A.S., Silaev F.A., Railroad Passenger Car Stand-Alone Power Supply System Static Converter, Electrical equipment: maintenance and repair, June 2010, pp.55-64 (in Russian)

[5] http://www.ti.com/lsds/ti/microcontroller/32-bit_c2000/c28x_delfino/overview.page?paramCriteria=no

[6] http://www.ti.com/lsds/ti/microcontroller/32-bit_c2000/c28x_arm_cortex-m3/overview.page?paramCriteria=no

[7] Alyamkin D.I., Anuchin A.S., Drozdov A.V., Kozachenko V.F., Tarasov A.S., Embedded control systems, Textbook, Publishing house MPEI, Moscow, 2010, P.270 (in Russian)