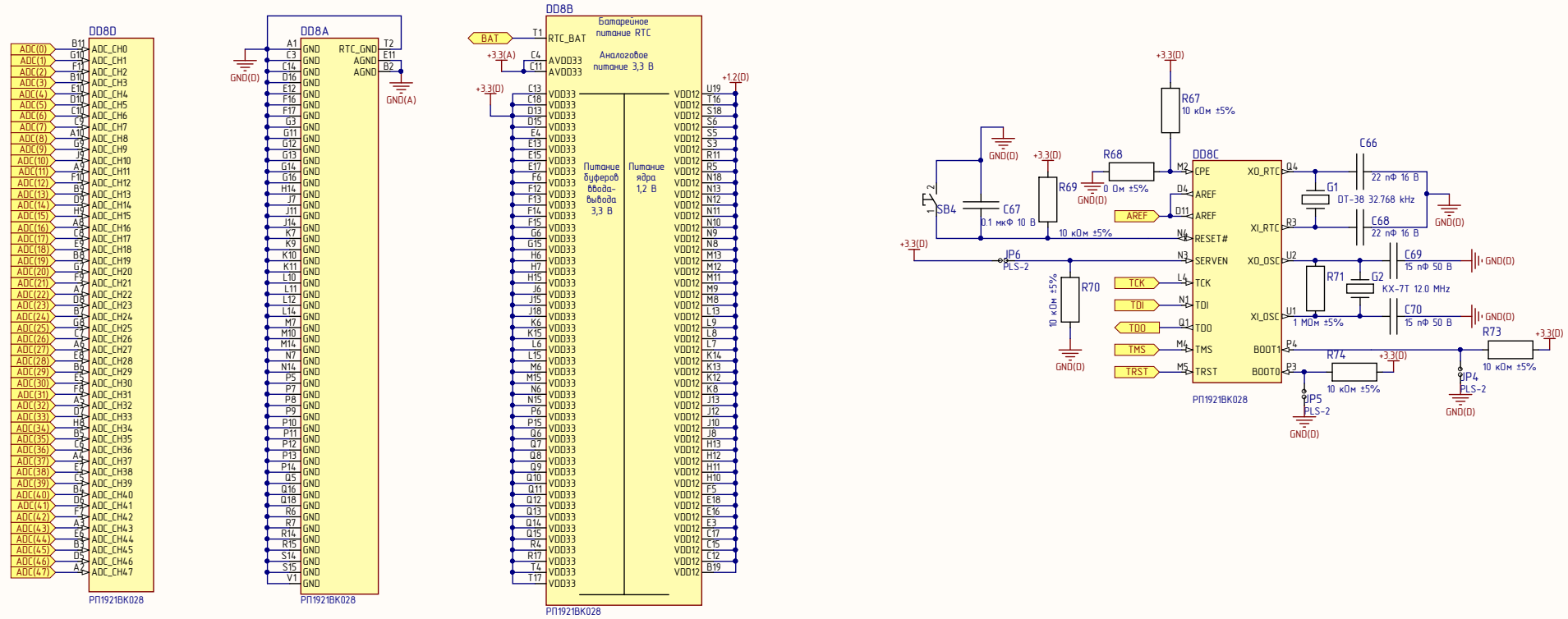

Плата печатная МСВ3
ВКФП.687253.396

Изм.	Лист	№ докум.	Подп.	Дата
Разраб.		Щестак		
Пров.		Клюев		
Т.контр.		Жарков		
Н.контр.		Подзорова		
Утв.		Анучин		

ВКФП.421243.395 Э3

Отладочная плата MotorControlBoard 1921ВК028

Схема электрическая принципиальная

Лит.	Масса	Масштаб
		1:1
Лист 1	Листов 6	

НПФ ВЕКТОР

Перв. примен. ВКФП.421243.395

Справ. №

Подп. и дата

Инв. № дубл.

Взам. инв. №

Подп. и дата

Инв. № подл.

DD8E

SPI_CLK0	T5	A0 / SPI0_CLK / I2C1_SCL / QEP3_A / LAU_LM0_0
SPI_RX0	T4	A1 / SPI0_RX / I2C1_SDA / QEP3_B / LAU_LM0_1
SPI_TX0	R4	A2 / SPI0_TX / TUART0_TX / QEP3_I / LAU_LM0_2
SPI_FSS0	R3	A3 / SPI0_FSS / TUART0_RX / QEP3_S / LAU_LM0_3
A4	T1	A4 / SDFM0_DATA / TMR2_EXTIN / QEP2_A / LAU_LM0_4
A5	S4	A5 / SDFM0_CLK / CAP_PWM3 / QEP2_B / LAU_LM0_5
A6	T3	A6 / SDFM1_DATA / CAP_PWM4 / QEP2_I / LAU_LM0_6
A7	R2	A7 / SDFM1_CLK / CAP_PWM5 / QEP2_S / LAU_LM0_7
A8	S3	A8 / SDFM2_DATA / QEP1_A / SW1_DIN / LAU_LM1_0
A9	T2	A9 / SDFM2_CLK / QEP1_B / SW1_SIN / LAU_LM1_1
A10	S2	A10 / SDFM3_DATA / QEP1_I / SW1_DOUT / LAU_LM1_2
A11	R1	A11 / SDFM3_CLK / QEP1_S / SW1_SOUT / LAU_LM1_3
QEP_A	S1	A12 / QEP0_A / CAP_PWM0 / TMR0_EXTIN / LAU_LM1_4
QEP_B	T1	A13 / QEP0_B / CAP_PWM1 / TMR1_EXTIN / LAU_LM1_5
QEP_I	R1	A14 / QEP0_I / CAP_PWM2 / MII_MDIO / LAU_LM1_6
QEP_S	R1	A15 / QEP0_S / CAP_PWM3 / MII_MDC / LAU_LM1_7

РП1921ВК028

DD8F

B0	T18	B0 / CAP_PWM0 / M0_PARITY / MII_RXCLK / LAU_LM2_0
B1	U20	B1 / CAP_PWM1 / M0_ADDR0 / MII_RXDV / LAU_LM2_1
B2	U19	B2 / CAP_PWM2 / M0_ADDR1 / MII_RXER / LAU_LM2_2
PWM_TZ0	R19	B3 / PWM_TZ0 / M0_ADDR2 / MII_TXCLK / LAU_LM2_3
PWM_TZ1	P19	B4 / PWM_TZ1 / M0_ADDR3 / MII_TXEN / LAU_LM2_4
PWM_TZ2	P17	B5 / PWM_TZ2 / M0_ADDR4 / MII_TXER / LAU_LM2_5
PWM0_A	M19	B6 / PWM0_A / M0_A_TXEN / MII_CRS / LAU_LM2_6
PWM0_B	M18	B7 / PWM0_B / M0_B_TXEN / MII_COL / LAU_LM2_7
PWM1_A	L19	B8 / PWM1_A / M0_A_TX / MII_TXD0 / LAU_LM3_0
PWM1_B	K19	B9 / PWM1_B / M0_A_TXN / MII_TXD1 / LAU_LM3_1
PWM2_A	K17	B10 / PWM2_A / M0_A_RX / MII_TXD2 / LAU_LM3_2
PWM2_B	K16	B11 / PWM2_B / M0_A_RXN / MII_TXD3 / LAU_LM3_3
PWM3_A	G20	B12 / PWM3_A / M0_B_TX / MII_RXD0 / LAU_LM3_4
PWM3_B	H17	B13 / PWM3_B / M0_B_TXN / MII_RXD1 / LAU_LM3_5
PWM4_A	G18	B14 / PWM4_A / M0_B_RX / MII_RXD2 / LAU_LM3_6
PWM4_B	H16	B15 / PWM4_B / M0_B_RXN / MII_RXD3 / LAU_LM3_7

РП1921ВК028

DD8G

PWM5_A	G17	C0 / PWM5_A / SW0_DIN / SPI2_CLK / M1_A_TX
PWM5_B	F18	C1 / PWM5_B / SW0_SIN / SPI2_TX / M1_A_TXN
PWM6_A	A20	C2 / PWM6_A / SW0_DOUT / SPI2_RX / M1_A_RX
PWM6_B	A19	C3 / PWM6_B / SW0_SOUT / SPI2_FSS / M1_A_RXN
PWM7_A	B18	C4 / PWM7_A / SPI1_FSS / UART0_RTS / M1_B_TX
PWM7_B	A18	C5 / PWM7_B / SPI1_CLK / UART0_DTR / M1_B_TXN
PWM8_A	A17	C6 / PWM8_A / SPI1_TX / UART0_CTS / M1_B_RX
PWM8_B	B17	C7 / PWM8_B / SPI1_RX / UART0_DSR / M1_B_RXN
UART2_TX	F1	C8 / I2C0_SCL / UART2_TX / UART0_DCD / M1_A_TXEN
UART2_RX	U1	C9 / I2C0_SDA / UART2_RX / UART0_RI / M1_B_TXEN
C10	H1	C10 / UART0_TX / TMR2_EXTIN / NMI / M1_PARITY
C11	H1	C11 / UART0_RX / TMR3_EXTIN / PLL_EXTSRC / M1_ADDR0
CAN0_TX	U1	C12 / CAN0_TX / TUART1_TX / SPI3_CLK / M1_ADDR1
CAN0_RX	J1	C13 / CAN0_RX / TUART1_RX / SPI3_RX / M1_ADDR2
C14	J1	C14 / CAN1_TX / UART1_TX / SPI3_TX / M1_ADDR3
C15	J1	C15 / CAN1_RX / UART1_RX / SPI3_FSS / M1_ADDR4

РП1921ВК028

DD8H

D0	T15	D0 / OW10_DATA / CLKOUT / UART0_SIR / LAU_CLK0
D1	U14	D1 / PWM9_A / I2C1_SCL / QEP3_A / LAU_CLK1
D2	U13	D2 / PWM9_B / I2C1_SDA / QEP3_B / LAU_CLK2
D3	V13	D3 / PWM_SYNC1 / OW11_DATA / QEP3_I / LAU_CLK3
PWM_TZ3	T13	D4 / MEM_CE0 / PWM_TZ3 / QEP3_S / TRACE_EXTCLK
PWM_TZ4	U13	D5 / MEM_CE1 / PWM_TZ4 / UART1_RTS / TRACE_CLK
PWM_TZ5	V13	D6 / MEM_CE2 / PWM_TZ5 / UART1_DTR / TRACE_DATA0
MEM_CE3	U12	D7 / MEM_CE3 / CAN0_TX / UART1_CTS / TRACE_DATA1
MEM_CE4	V12	D8 / MEM_CE4 / CAN0_RX / UART1_DSR / TRACE_DATA2
D9	U11	D9 / MEM_CE5 / CAN1_TX / UART1_DCD / TRACE_DATA3
D10	V11	D10 / MEM_CE6 / CAN1_RX / UART1_RI / CAP_PWM0
D11	U10	D11 / MEM_CE7 / UART1_SIR / CAP_PWM1
MEM_LB	V10	D12 / MEM_LB / TUART0_TX / PWM0_A / CAP_PWM2
MEM_UB	U9	D13 / MEM_UB / TUART0_RX / PWM0_B / CAP_PWM3
MEM_WE	V9	D14 / MEM_WE / MII_MDIO / PWM1_A / CAP_PWM4
MEM_OE0	V8	D15 / MEM_OE / MII_MDC / PWM1_B / CAP_PWM5

РП1921ВК028

DD8I

E0	S16	E0 / MEM_DATA0 / MII_TXD0 / M0_PARITY / UART2_RTS
E1	S15	E1 / MEM_DATA1 / MII_TXD1 / M0_ADDR0 / UART2_DTR
E2	U18	E2 / MEM_DATA2 / MII_TXD2 / M0_ADDR1 / UART2_CTS
E3	V18	E3 / MEM_DATA3 / MII_TXD3 / M0_ADDR2 / UART2_DSR
E4	V17	E4 / MEM_DATA4 / MII_RXD0 / M0_ADDR3 / UART2_DCD
E5	V16	E5 / MEM_DATA5 / MII_RXD1 / M0_ADDR4 / UART2_RI
E6	T17	E6 / MEM_DATA6 / MII_RXD2 / M0_A_TXEN / UART2_SIR
E7	S20	E7 / MEM_DATA7 / MII_RXD3 / M0_B_TXEN / UART3_SIR
E8	S19	E8 / MEM_DATA8 / MII_RXCLK / M0_A_TX / UART3_RX
E9	R20	E9 / MEM_DATA9 / MII_RXDV / M0_A_TXN / UART3_TX
E10	R19	E10 / MEM_DATA10 / MII_RXER / M0_A_RX / UART3_RTS
E11	Q20	E11 / MEM_DATA11 / MII_TXCLK / M0_A_RXN / UART3_DTR
E12	Q19	E12 / MEM_DATA12 / MII_TXEN / M0_B_TX / UART3_CTS
E13	P18	E13 / MEM_DATA13 / MII_TXER / M0_B_TXN / UART3_DSR
E14	P19	E14 / MEM_DATA14 / MII_CRS / M0_B_RX / UART3_DCD
E15	P18	E15 / MEM_DATA15 / MII_COL / M0_B_RXN / UART3_RI

РП1921ВК028

DD8J

F0	P20	F0 / MEM_ADDR0 / M1_A_TX / SPI0_CLK / UART0_RTS
F1	N19	F1 / MEM_ADDR1 / M1_A_TXN / SPI0_TX / UART0_DTR
F2	N18	F2 / MEM_ADDR2 / M1_A_RX / SPI0_RX / UART0_CTS
F3	N17	F3 / MEM_ADDR3 / M1_A_RXN / SPI0_FSS / UART0_DSR
F4	N20	F4 / MEM_ADDR4 / M1_B_TX / SPI1_CLK / UART0_DCD
F5	M17	F5 / MEM_ADDR5 / M1_B_TXN / SPI1_TX / UART0_RI
F6	M19	F6 / MEM_ADDR6 / M1_B_RX / SPI1_RX / UART0_RX
F7	M20	F7 / MEM_ADDR7 / M1_B_RXN / SPI1_FSS / UART0_TX
F8	L17	F8 / MEM_ADDR8 / M1_A_TXEN / SPI2_CLK / UART0_SIR
F9	L18	F9 / MEM_ADDR9 / M1_B_TXEN / SPI2_TX / UART1_SIR
F10	L19	F10 / MEM_ADDR10 / M1_PARITY / SPI2_RX / TUART1_TX
F11	K17	F11 / MEM_ADDR11 / M1_ADDR0 / SPI2_FSS / TUART1_RX
F12	K18	F12 / MEM_ADDR12 / M1_ADDR1 / SPI3_CLK / QEP2_A
F13	K19	F13 / MEM_ADDR13 / M1_ADDR2 / SPI3_TX / QEP2_B
F14	J18	F14 / MEM_ADDR14 / M1_ADDR3 / SPI3_RX / QEP2_I
F15	J19	F15 / MEM_ADDR15 / M1_ADDR4 / SPI3_FSS / QEP2_S

РП1921ВК028

DD8K

G0	U6	G0 / MEM_ADDR16 / CAP_PWM0 / QEP0_A / SDFM0_DATA
G1	V6	G1 / MEM_ADDR17 / CAP_PWM1 / QEP0_B / SDFM0_CLK
G2	U7	G2 / MEM_ADDR18 / CAP_PWM2 / QEP0_I / SDFM1_DATA
G3	V7	G3 / MEM_ADDR19 / CAP_PWM3 / QEP0_S / SDFM1_CLK
G4	U8	G4 / MEM_ADDR20 / CAP_PWM4 / QEP1_A / SDFM2_DATA
G5	V8	G5 / MEM_ADDR21 / CAP_PWM5 / QEP1_B / SDFM2_CLK
G6	T7	G6 / MEM_ADDR22 / I2C0_SCL / QEP1_I / SDFM3_DATA
G7	T8	G7 / MEM_ADDR23 / I2C0_SDA / QEP1_S / SDFM3_CLK
G8	U9	G8 / TUART0_TX / MEM_CE0 / SW0_DIN / LAU_CLK0
G9	V9	G9 / TUART0_RX / MEM_CE1 / SW0_SIN / LAU_CLK1
G10	R11	G10 / I2C1_SCL / MEM_CE2 / SW0_DOUT / LAU_CLK2
G11	S11	G11 / I2C1_SDA / MEM_CE3 / SW0_SOUT / LAU_CLK3
G12	T11	G12 / TMR0_EXTIN / MEM_CE4 / SW1_DIN / CLKOUT
G13	U11	G13 / TMR1_EXTIN / MEM_CE5 / SW1_SIN / NMI
G14	V11	G14 / MII_MDIO / MEM_CE6 / SW1_DOUT / PLL_EXTSRC
G15	V11	G15 / MII_MDC / MEM_CE7 / SW1_SOUT / PWM_SYNC1

РП1921ВК028

DD8L

H0	B1	H0 / MII_TXD0 / MEM_DATA0 / SPI0_CLK / PWM0_A
H1	C1	H1 / MII_TXD1 / MEM_DATA1 / SPI0_TX / PWM0_B
H2	D1	H2 / MII_TXD2 / MEM_DATA2 / SPI0_RX / PWM1_A
H3	D2	H3 / MII_TXD3 / MEM_DATA3 / SPI0_FSS / PWM1_B
H4	D3	H4 / MII_RXD0 / MEM_DATA4 / SPI1_CLK / PWM2_A
H5	D4	H5 / MII_RXD1 / MEM_DATA5 / SPI1_TX / PWM2_B
H6	E4	H6 / MII_RXD2 / MEM_DATA6 / SPI1_RX / PWM3_A
H7	E5	H7 / MII_RXD3 / MEM_DATA7 / SPI1_FSS / PWM3_B
H8	F5	H8 / MII_RXCLK / MEM_DATA8 / SPI2_CLK / PWM4_A
H9	F6	H9 / MII_RXDV / MEM_DATA9 / SPI2_TX / PWM4_B
H10	F4	H10 / MII_RXER / MEM_DATA10 / SPI2_RX / PWM5_A
H11	G1	H11 / MII_TXCLK / MEM_DATA11 / SPI2_FSS / PWM5_B
H12	G2	H12 / MII_TXEN / MEM_DATA12 / CAN0_TX / PWM6_A
H13	G3	H13 / MII_TXER / MEM_DATA13 / CAN0_RX / PWM6_B
H14	H5	H14 / MII_CRS / MEM_DATA14 / CAN1_TX / PWM7_A
H15	H6	H15 / MII_COL / MEM_DATA15 / CAN1_RX / PWM7_B

РП1921ВК028

DD8M

J0	J3	J0 / M0_PARITY / MEM_ADDR0 / LAU_LM0_0 / PWM8_A
J1	K4	J1 / M0_ADDR0 / MEM_ADDR1 / LAU_LM0_1 / PWM8_B
J2	K2	J2 / M0_ADDR1 / MEM_ADDR2 / LAU_LM0_2 / PWM9_A
J3	K1	J3 / M0_ADDR2 / MEM_ADDR3 / LAU_LM0_3 / PWM9_B
J4	K3	J4 / M0_ADDR3 / MEM_ADDR4 / LAU_LM0_4 / OW11_DATA
J5	K5	J5 / M0_ADDR4 / MEM_ADDR5 / LAU_LM0_5 / TMR3_EXTIN
J6	K6	J6 / M0_A_TX / MEM_ADDR6 / LAU_LM0_6 / PWM_TZ0
J7	L1	J7 / M0_A_TXN / MEM_ADDR7 / LAU_LM0_7 / PWM_TZ1
J8	L2	J8 / M0_A_RX / MEM_ADDR8 / LAU_LM1_0 / PWM_TZ2
J9	N1	J9 / M0_A_RXN / MEM_ADDR9 / LAU_LM1_1 / PWM_TZ3
J10	M1	J10 / M0_B_TX / MEM_ADDR10 / LAU_LM1_2 / PWM_TZ4
J11	M4	J11 / M0_B_TXN / MEM_ADDR11 / LAU_LM1_3 / PWM_TZ5
J12	N4	J12 / M0_B_RX / MEM_ADDR12 / LAU_LM1_4 / UART1_RTS
J13	N3	J13 / M0_B_RXN / MEM_ADDR13 / LAU_LM1_5 / UART1_DTR
J14	P1	J14 / M0_A_TXEN / MEM_ADDR14 / LAU_LM1_6 / UART1_CTS
J15	P2	J15 / M0_B_TXEN / MEM_ADDR15 / LAU_LM1_7 / UART1_DSR

РП1921ВК028

DD8N

K0	P1	K0 / M1_A_TX / MEM_ADDR16 / LAU_LM2_0 / UART1_DCD
K1	G4	K1 / M1_A_TXN / MEM_ADDR17 / LAU_LM2_1 / UART1_RI
K2	G3	K2 / M1_A_RX / MEM_ADDR18 / LAU_LM2_2 / UART2_RTS
K3	R4	K3 / M1_A_RXN / MEM_ADDR19 / LAU_LM2_3 / UART2_DTR
K4	R1	K4 / M1_B_TX / MEM_ADDR20 / LAU_LM2_4 / UART2_CTS
K5	S4	K5 / M1_B_TXN / MEM_ADDR21 / LAU_LM2_5 / UART2_DSR
K6	S1	K6 / M1_B_RX / MEM_ADDR22 / LAU_LM2_6 / UART2_DCD
K7	T1	K7 / M1_B_RXN / MEM_ADDR23 / LAU_LM2_7 / UART2_RI
K8	U1	K8 / M1_ADDR0 / MEM_WE / LAU_LM3_0 / UART1_RX
MEM_OE1	U1	K9 / M1_ADDR1 / MEM_OE / LAU_LM3_1 / UART1_TX
K10	V1	K10 / M1_ADDR2 / MEM_LB / LAU_LM3_2 / UART2_RX
K11	U1	K11 / M1_ADDR3 / MEM_UB / LAU_LM3_3 / UART2_TX
K12	U1	K12 / M1_ADDR4 / NMI / LAU_LM3_4 / UART2_SIR
K13	V1	K13 / M1_A_TXEN / OW10_DATA / LAU_LM3_5 / UART3_SIR
K14	U1	K14 / M1_B_TXEN / CLKOUT / LAU_LM3_6 / UART3_RX
K15	V1	K15 / M1_PARITY / PLL_EXTSRC / LAU_LM3_7 / UART3_TX

РП1921ВК028

DD8O

L0	J19	L0 / TRACE_CLK / PWM0_A / LAU_LM4_0 / UART3_RTS
L1	J20	L1 / TRACE_DATA0 / PWM0_B / LAU_LM4_1 / UART3_DTR
L2	H19	L2 / TRACE_DATA1 / PWM1_A / LAU_LM4_2 / UART3_CTS
L3	H20	L3 / TRACE_DATA2 / PWM1_B / LAU_LM4_3 / UART3_DSR
L4	G19	L4 / TRACE_DATA3 / PWM2_A / LAU_LM4_4 / UART3_DCD
L5	F19	L5 / TRACE_EXTCLK / PWM2_B / LAU_LM4_5 / UART3_RI
L6	F20	L6 / TMR0_EXTIN / PWM3_A / LAU_LM4_6 / I2C0_SCL
L7	E19	L7 / TMR1_EXTIN / PWM3_B / LAU_LM4_7 / I2C0_SDA
L8	E20	L8 / TUART0_TX / PWM4_A / LAU_LM5_0 / I2C1_SCL
L9	D17	L9 / TUART0_RX / PWM4_B / LAU_LM5_1 / I2C1_SDA
L10	D18	L10 / TMR2_EXTIN / PWM5_A / LAU_LM5_2 /TUART1_TX
L11	D19	L11 / TMR3_EXTIN / PWM5_B / LAU_LM5_3 / TUART1_RX
L12	D20	L12 / QEP3_A / PWM6_A / LAU_LM5_4 / SW0_DIN
L13	C19	L13 / QEP3_B / PWM6_B / LAU_LM5_5 / SW0_SIN
L14	C20	L14 / QEP3_I / PWM7_A / LAU_LM5_6 / SW0_DOUT
L15	C21	L15 / QEP3_S / PWM7_B / LAU_LM5_7 / SW0_SOUT

РП1921ВК028

DD8P

M0	B20	M0 / QEP0_A / PWM8_A / LAU_LM6_0 / SDFM0_DATA
M1	B19	M1 / QEP0_B / PWM8_B / LAU_LM6_1 / SDFM0_CLK
M2	C19	M2 / QEP0_I / PWM9_A / LAU_LM6_2 / SDFM1_DATA
M3	A19	M3 / QEP0_S / PWM9_B / LAU_LM6_3 / SDFM1_CLK
M4	B18	M4 / QEP1_A / PWM_SYNC1 / LAU_LM6_4 / SDFM2_DATA
CAP_PWM0	A18	M5 / QEP1_B / CAP_PWM0 / LAU_LM6_5 / SDFM2_CLK
CAP_PWM1	E17	M6 / QEP1_I / CAP_PWM1 / LAU_LM6_6 / SDFM3_DATA
CAP_PWM2	D17	M7 / QEP1_S / CAP_PWM2 / LAU_LM6_7 / SDFM3_CLK
M8	B17	M8 / QEP2_A / CAP_PWM3 / LAU_LM7_0 / CLKOUT
M9	A17	M9 / QEP2_B / CAP_PWM4 / LAU_LM7_1 / PLL_EXTSRC
M10	B16	M10 / QEP2_I / CAP_PWM5 / LAU_LM7_2 / PWM_TZ0
M11	A16	M11 / QEP2_S / LAU_LM7_3 / PWM_TZ1
M12	D17	M12 / SW1_DIN / CAN0_TX / LAU_LM7_4 / PWM_TZ2
M13	B17	M13 / SW1_SIN / CAN0_RX / LAU_LM7_5 / PWM_TZ3
M14	A17	M14 / SW1_DOUT / CAN1_TX / LAU_LM7_6 / PWM_TZ4
M15	A16	M15 / SW1_SOUT / CAN1_RX / LAU_LM7_7 / PWM_TZ5

РП1921ВК028

Изм.	Лист	№ докум.	Подп.	Дата

ВКФП.421243.395 ЭЗ

Лист 2

Подп. и дата | Инв. № дубл. | Взам. инв. № | Подп. и дата | Инв. № подл.

Питание

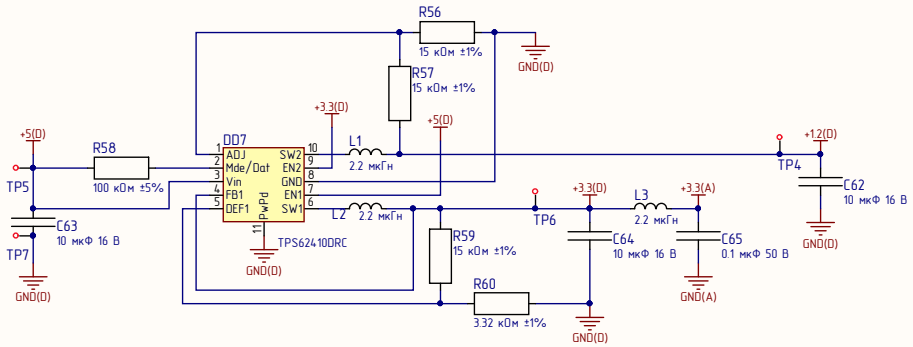

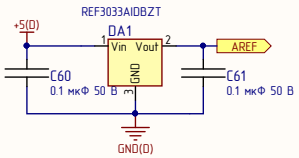

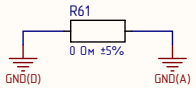

Индикация

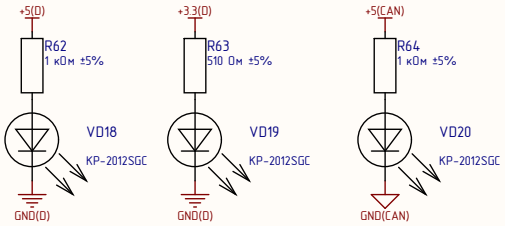

Управление

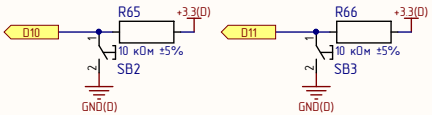

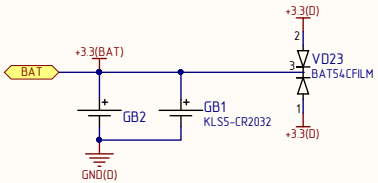

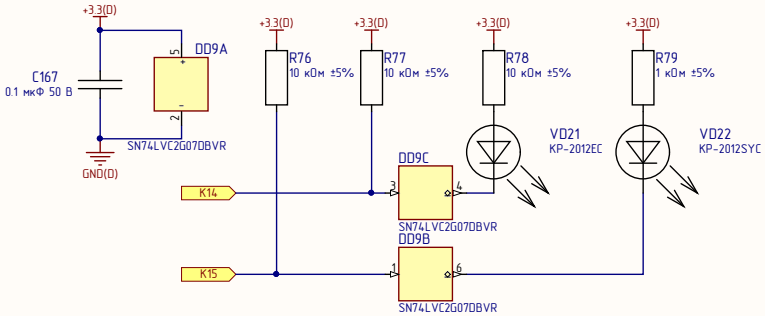

Изм.	Лист	№ докум.	Подп.	Дата	ВКФП.421243.395 ЭЗ	Лист 3

Подп. и дата | Инв. № дубл. | Взам. инв. № | Подп. и дата | Инв. № подл.

Интерфейсы

CAN

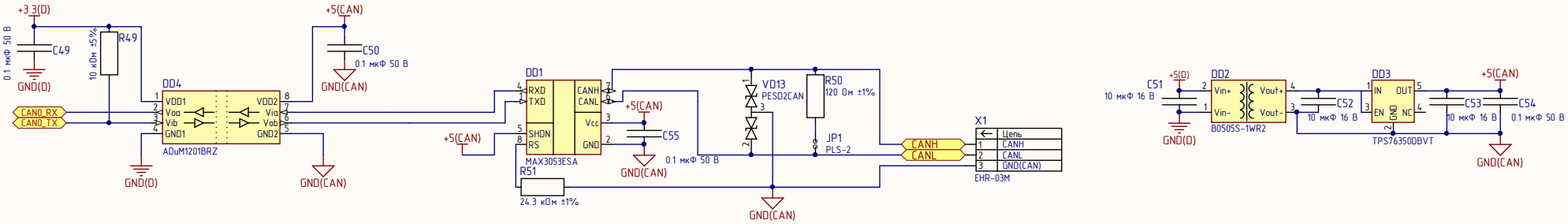

USB-RS

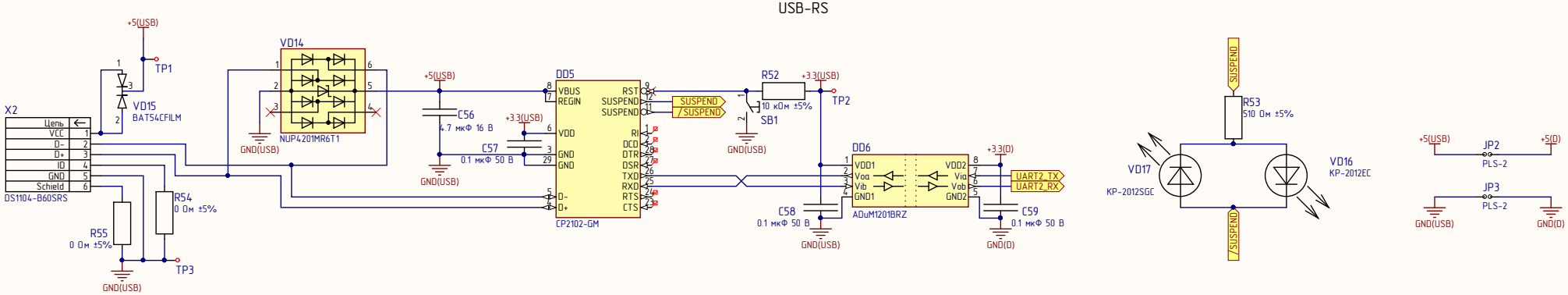

Изм.	Лист	№ докум.	Подп.	Дата	ВКФП.421243.395 ЭЭ	Лист 4

Подп. и дата | Инв. № дубл. | Взам. инв. № | Подп. и дата | Инв. № подл.

Защиты АЦП

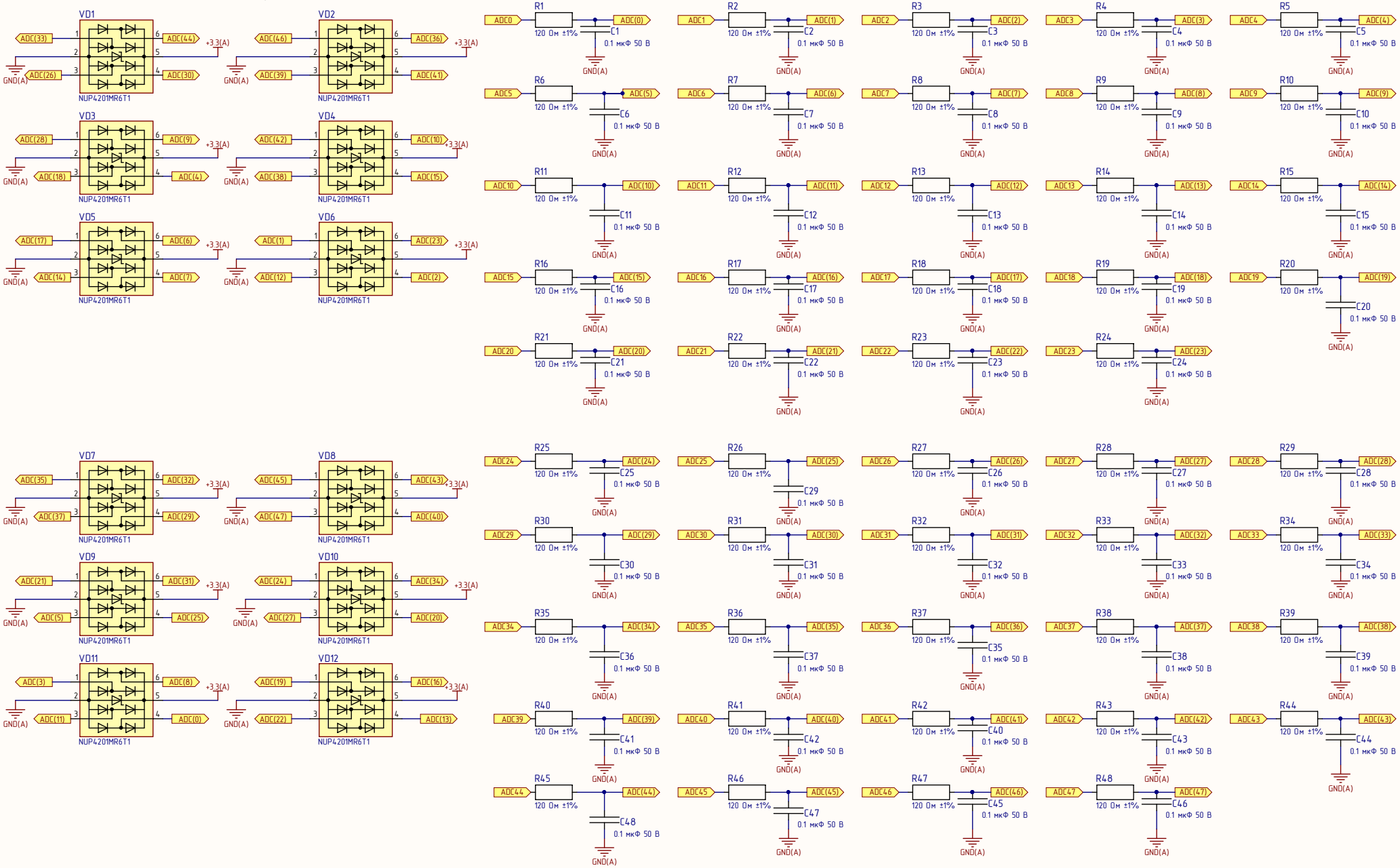

Изм.	Лист	№ докум.	Подп.	Дата	ВКФП.421243.395 Э3	Лист 5

Подп. и дата | Инв. № дубл. | Взам. инв. № | Подп. и дата | Инв. № подл.

Аналоговые вводы

JTAG

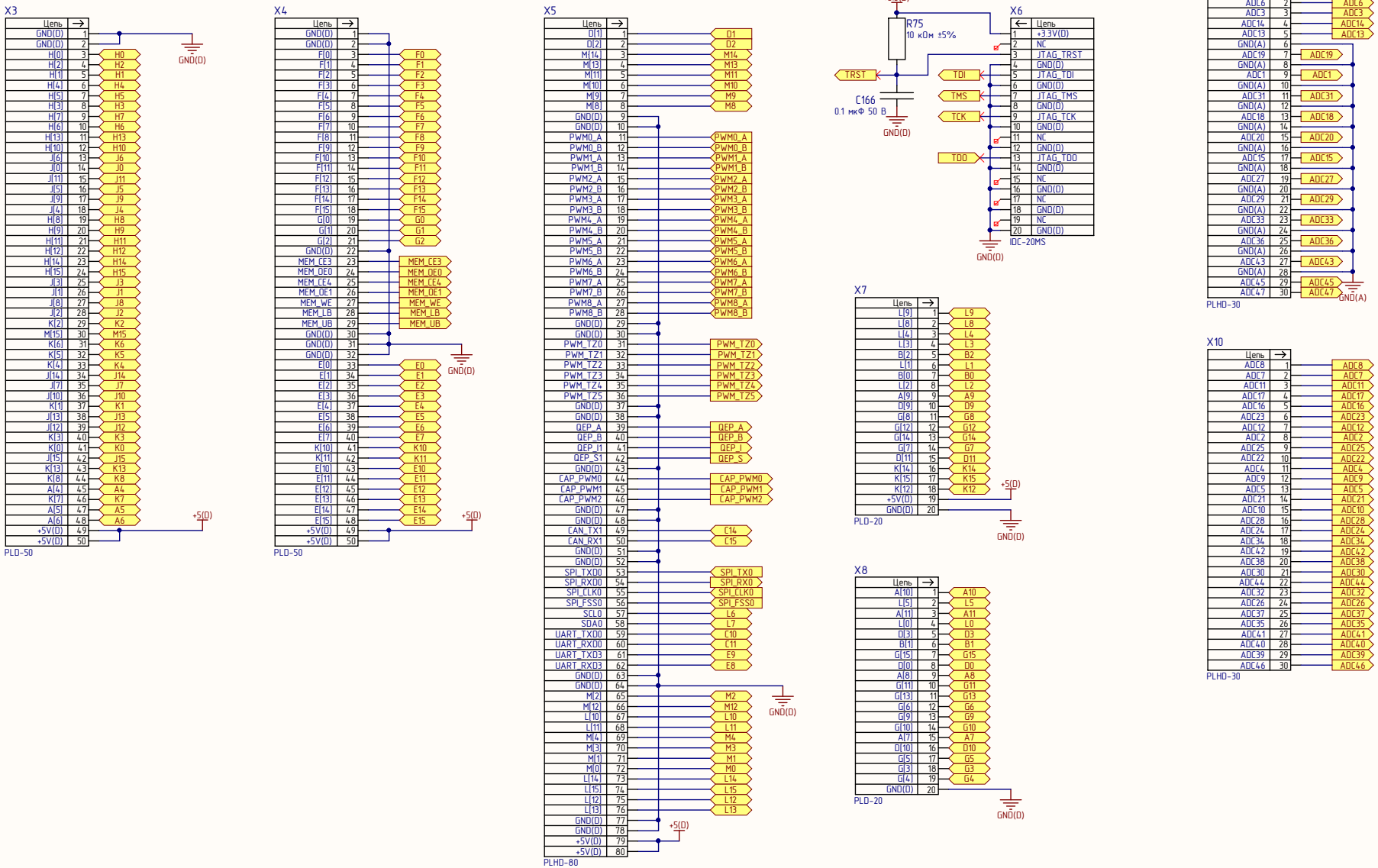

Изм.	Лист	№ докум.	Подп.	Дата

ВКФП.421243.395 ЭЗ

Лист 6

Подп. и дата | Инв. № дубл. | Взам. инв. № | Подп. и дата | Инв. № подл.